NOTES:
1.MATERIAL:
HOUSING:PA 9T,BLACK,UL 94
TERMINAL:SEE TABLE
2.FINISH:
CONTACT:AU 3u" PLATING ON CONTACT AREA
AU 1u" PLATIN ON SOLDERTAILS AREA
3.ALL DIMENSIONS MARKED ▼ MUST BE CONTROLLED BY QC
4.PRODUCT SPECIFICATIONS:
4-1 WITHSTANDING: 500VAC/MINUTE
4-2 CONTACT RESISTANCE: 50 MILLIOHM (intial) Max.
4-3 INSULATION RESISTANCE: 1000 MEGOHM Min.
4-4 MATING FORCE : 0.7-2.0 Kgf .
4-5 UNMATING FORCE : 0.5-2.0 Kgf .
4-6 OPERATION TEMPERATURE : -25° TO +85°
4-7 STORAGE TEMPERATURE: -25° TO +85°
4-8 DURABILITY : 5000 CYCLES

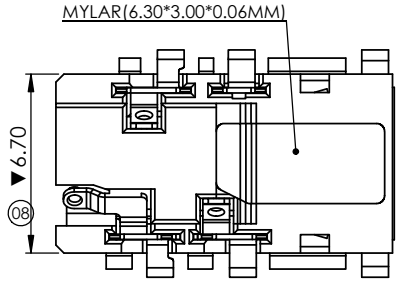

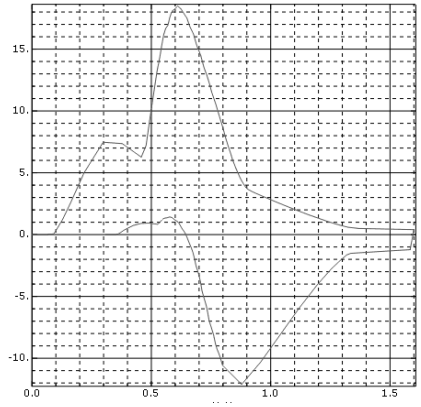

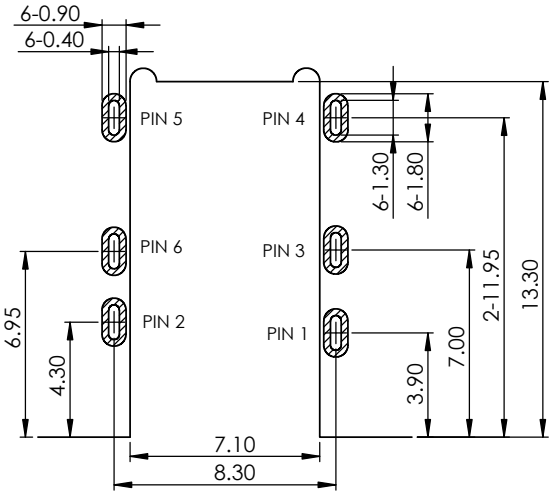

PCB LAYOUT T=0.50mm
(TOLERANCE:0.05mm)

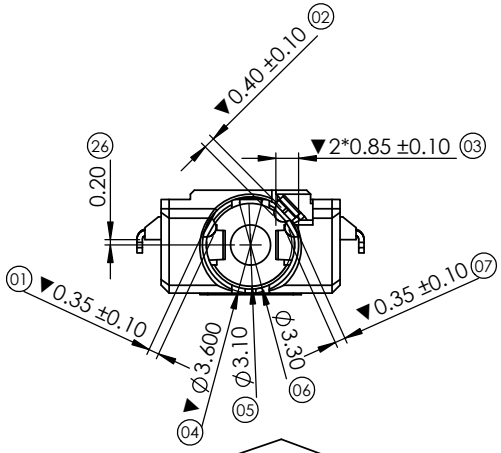

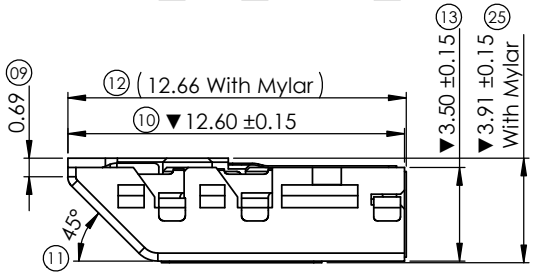

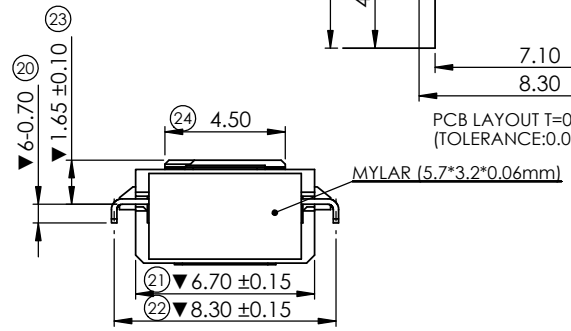

NO.	DESCRIPTION
PIN 1	GND / MIC+
PIN 2	MIC+ / GND
PIN 3	R AUDIO
PIN 4	L AUDIO / DETECT
PIN 5	DETECT / L AUDIO
PIN 6	N/A

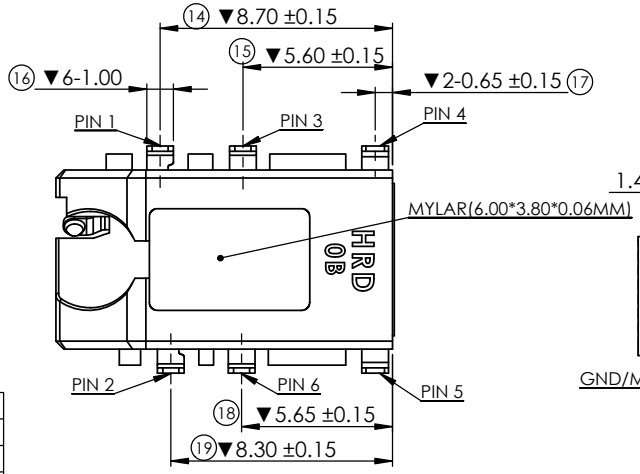

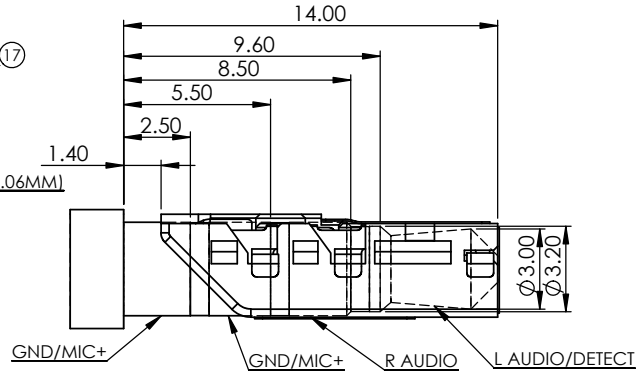

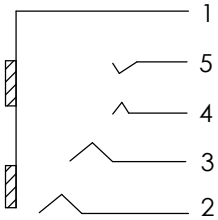

PRODUCT APPLICATION:
THE SPRING WORKING POSITION WHEN PLUG IN

Mylar 3	PET T=0.06mm	YELLOW	1
Mylar 2	PET T=0.06mm	YELLOW	1
Mylar 1	PET T=0.06mm	YELLOW	1
HOUSING	PA9T , BLACK		1
PIN 6	C5210 T=0.20mm	50U" MIN Ni UNDER PLATED OVER ALL 1U" MIN AU ON SOLDER AREA	1
PIN 5	SUS T=0.20mm	50U" MIN Ni UNDER PLATED OVER ALL 3U" MIN AU ON CONTACT AREA 1U" MIN AU ON SOLDER AREA	1
PIN 4			1
PIN 3	C5210 T=0.20mm		1
PIN 2			1
PIN 1			1
NAME	MATERIAL	FINISH	Q'TY

REV.	ECN NO.	DESCRIPTION	DATE
A	———	NEW	04/16'2018

UNITS: mm
DATE: 04/16'2018
SCALE: 5 / 1
SHEET: 1 / 2
REV. A

GENERAL TOLERANCE

X.	±0.30	X.°	±2.00°
.X	±0.20	.X°	±1.00°
.XX	±0.15	.XX°	±0.50°
.XXX	±0.08		

MATERIAL:
FINISH: SEE NOTE

DRAW:
CHECKED:
APPROVE:

PART N0: PH121-0B18F39M
TITLE: ϕ3.50MM PHONE JACK CONN.
DRAWING NO:

鸿日达科技股份有限公司
HONGRIDA ELECTRONIC TECHNOLOGY CO, LTD.