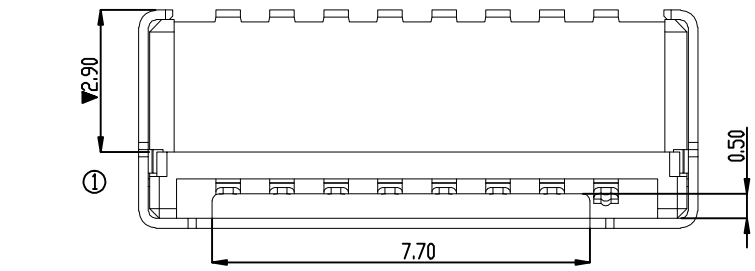

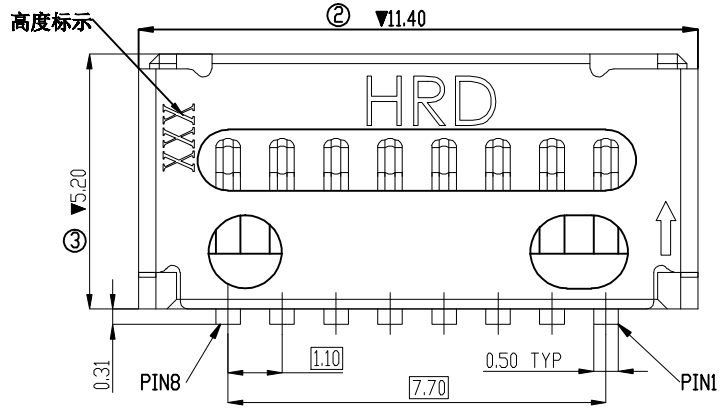

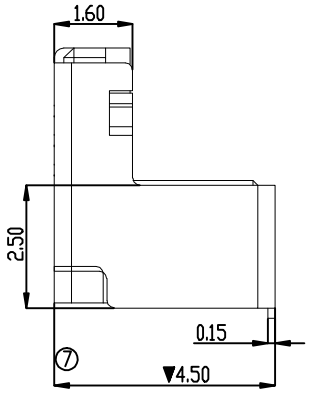

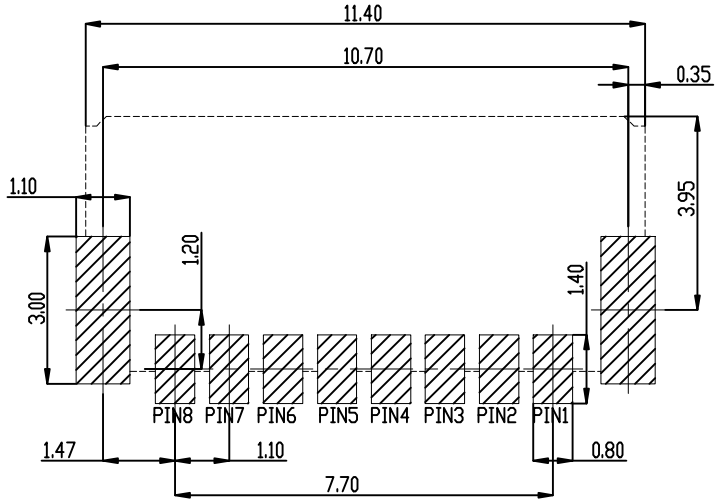

RECOMMENDED P.C.B.LAYOUT
TOLERANCE: ±0.05mm

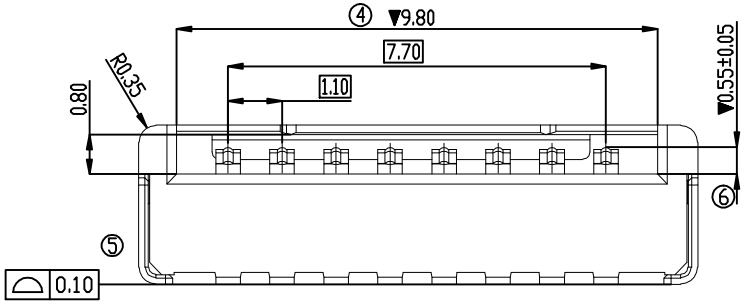

pin number	pin name
pin 8	DAT1
pin 7	DAT0
pin 6	VSS
pin 5	CLK
pin 4	VDD
pin 3	CMD
pin 2	CD/DAT3
pin 1	DAT2

NOTES:
1.MATERIAL:
HOUSING:LCP,BLACK,UL 94V-0
TERMINAL:COPPER ALLOY,T=0.15mm
SHELL:STAINLESS STEEL,T=0.20mm
2.FINISH:
CONTACT:50u" MIN Ni UNDERPLATING OVERALL GOLD FLASH ON CONTACT AREA AND SOLDER AREA
SHELL:50u" MIN Ni UNDERPLATING OVERALL SELECTIVE 1-3u" AU PLATING ON SOLDER AREA
3.SPECIFICATIONS:
3-1.Rated Current: 0.5A
3-2.Rated Voltage: 30 V DC
3-3.Operating temperature: -30℃ to 85℃
3-4.Storage temperature: -30℃ to 85℃
4.GP PASSED ACCORD WITH RoHS STANDARD.
5.ALL DIMENSIONS MARKED▼MUST BE CONTROLLED BY QC.

REV.	ECN NO.	DESCRIPTION	DATE

UNITS: mm
DATE: 10/25'2018
SCALE: 10 : 1
SHEET: 1 / 1
REV. A

GENERAL TOLERANCE

X.	±0.25	X.°	±5°
.X	±0.15	.X°	±3°
.XX	±0.10	.XX°	±1°
.XXX	±0.05	.XXX°	±0.50°

MATERIAL:
FINISH: SEE NOTE

DRAW:
CHECKED:
APPROVE:

PART NO: T08-BB08F451
TITLE: 基空TF-card (外壳两圆孔)
DRAWING NO:

鸿日达科技股份有限公司
HONGRIDA ELECTRONIC TECHNOLOGY CO.,LTD.